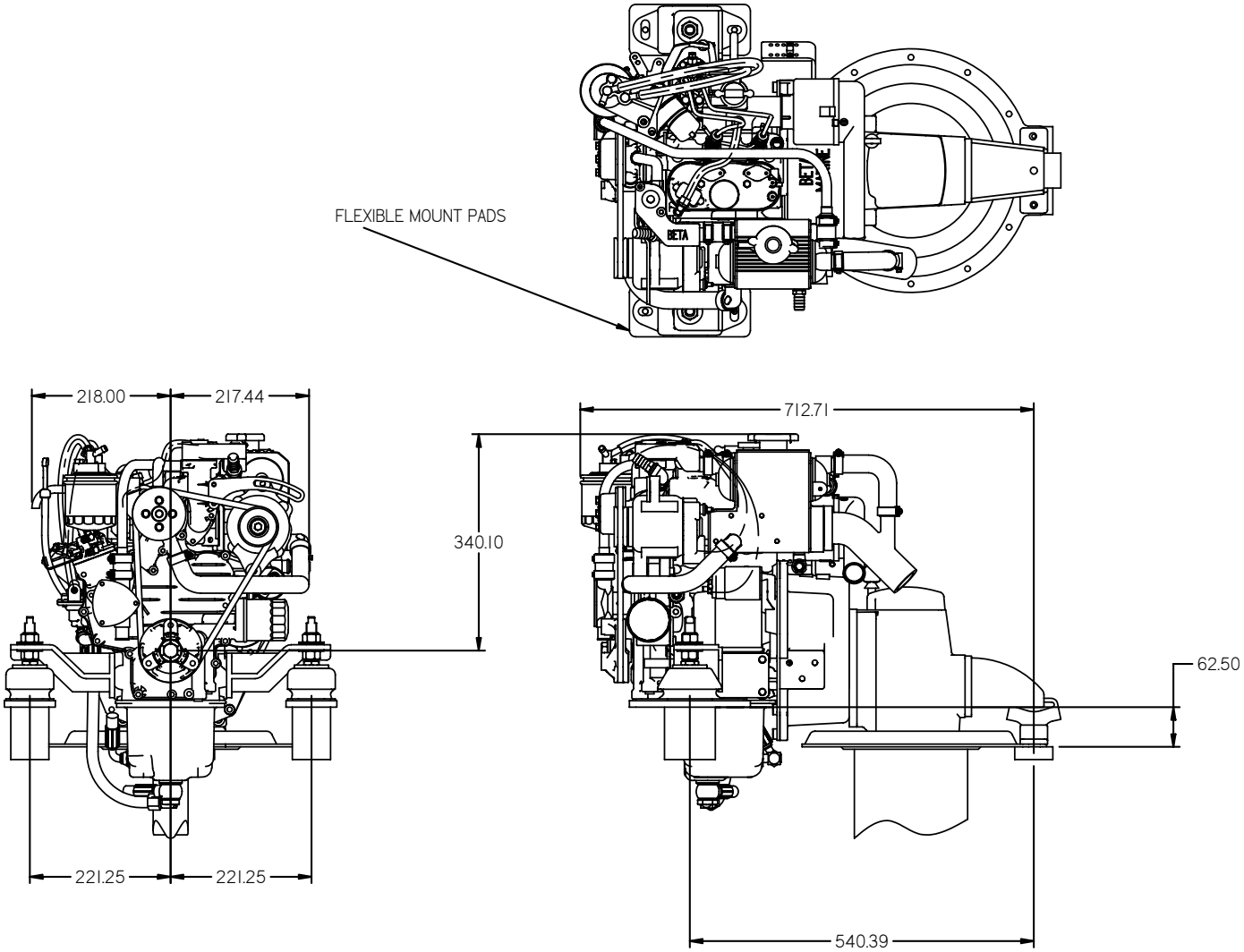

REV	DESCRIPTION	DATE	APP'D	DRAWN
01				

MATL:

FINISH: NONE

UNTOLERANCED DIM'S: ± 0.25

NOTES:

TITLE:

BZ482 VOLVO MD5B

DIMENSIONS IN MM (INCH)
DO NOT SCALE

SCALE: NTS

DATE CREATED: 20/12/2007

PART FILE NAME: 100-07102 SPECAIL FEET FOR K19401 VOLVO MD5B.dft

BETA MARINE
TEL: (01452) 723492 FAX: (01452) 729916
BETA MARINE LTD,
DAVY WAY,
WATERWELLS,
QUEDGELEY,
GLOUCESTER. GL2 2AD, UK

DRAWN BY: TW

CHECKED BY: LT

SIZE A4

DWG NO: 100-07102

REV 00

PART NUMBER: Same as Drawing number

PAGE 1 of 1